INSTRUCTIONS (easy as 1-2-3)

1) Click on the "CLEAR FORM" button below.
2) Fill in your known dimensions by clicking on, or tabbing to, the specific box.
3) Print the form and fax it to MAIN MFG. PRODUCTS at 810-953-1385.

---- Be sure to include the quantity, material needed, your name, company name, and phone number for a quick response.

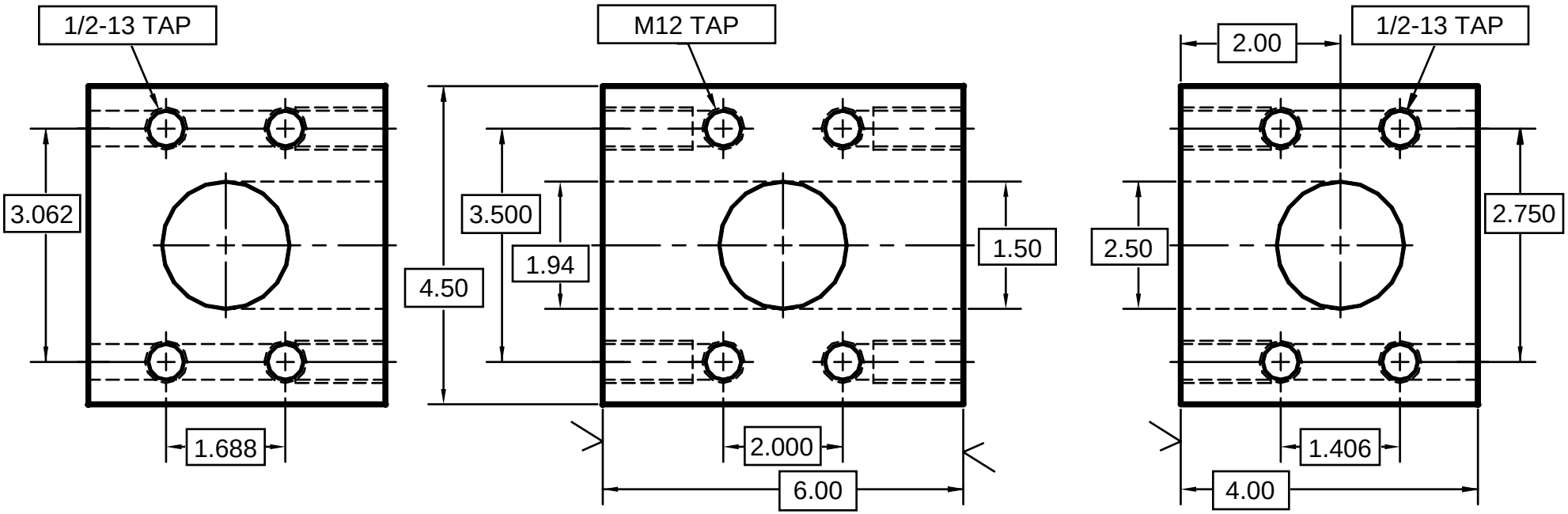

QUAN NEEDED: MATERIAL:

COMPANY NAME
ADDRESS

PH, FAX, EMAIL

Your Name & Company Name
Address
City, State Zip Code
P ###-###-#### F ###-###-####
EMAIL@EMAIL.COM

CLEAR FORM PRINT FORM

MISC. NOTES: